Toothless Double Row Angular Contact Ball Slewing Bearings

SINOFOLIV

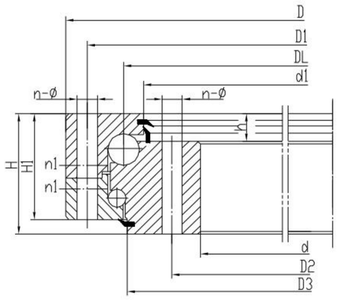

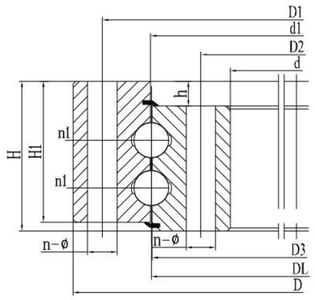

NOTE:

1. n1 is the number of lubricating oil holes, the customer can specify the location of oil holes according to the use situation.
2. n-φ can be changed into thread hole, thread diameter M, thread depth 2M.
3. The specifications in this sample are standard products, please contact SINOFOUV for any other special requirements.

Bearing Part Number	Boundary Dimensions			Mounting Hole Dimensions				Configuration Dimensions						Weight
	D	d	H	D1	D2	n	ϕ	D3	d1	H1	h	n1	M	kg
	mm			mm			mm	mm					mm	
HSB500D	616	384	106	580	420	20	18	482	477	96	26	4	16	121
HSB560D	676	444	106	640	480	20	18	543	537	96	26	4	16	136
HSB630D	746	514	106	710	550	24	18	613	607	96	26	4	16	152
HSB710D	826	594	106	790	630	24	18	692	687	96	26	4	16	172
HSB800D	942	658	124	898	702	30	22	777	771	114	29	6	20	284
HSB900D	1042	758	124	998	802	30	22	877	871	114	29	6	20	316
HSB1000D	1142	858	124	1098	902	36	22	977	971	114	29	6	20	349
HSB1120D	1262	978	124	1218	1022	36	22	1097	1091	114	29	6	20	394
HSB1250D	1426	1074	160	1374	1126	40	26	1215	1214	150	39	5	24	709
HSB1400D	1576	1224	160	1524	1272	40	26	1365	1364	150	39	5	24	787
HSB1600D	1776	1424	160	1724	1476	45	26	1565	1564	150	39	5	24	899
HSB1783D	1959	1606	166	1893	1672	60	33	1781	1785	158	26	10	30	974
HSB1800D	1976	1624	160	1924	1676	45	26	1765	1764	150	39	5	24	1018
HSB2000D	2215	1785	190	2149	1851	48	33	1965	1962	178	47	8	30	1586
HSB2240D	2455	2025	190	2389	2091	48	33	2206	2202	178	47	8	30	1789
HSB2500D	2715	2285	190	2649	2351	56	33	2465	2462	178	47	8	30	1990
HSB2800D	3015	2585	190	2949	2651	56	33	2765	2762	178	47	8	30	2243
HSB3150D	3428	2872	226	3338	2962	56	45	3104	3102	214	56	8	42	3762
HSB3550D	3828	3272	226	3738	3362	56	45	3504	3502	214	56	8	42	4272
HSB4000D	4278	3722	226	4188	3812	60	45	3954	3952	214	56	10	42	4828
HSB4500D	4778	4222	226	4688	4312	60	45	4454	4452	214	56	10	42	5465